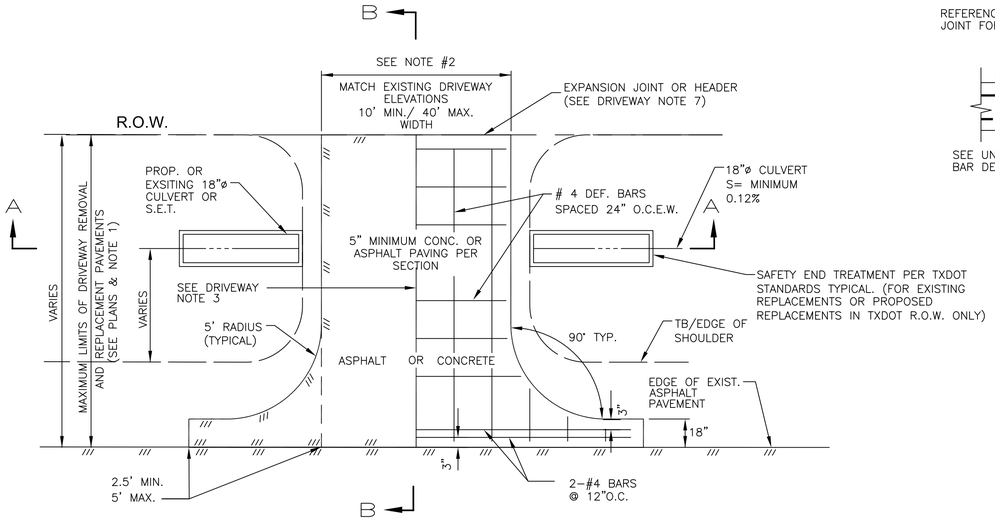

PLAN

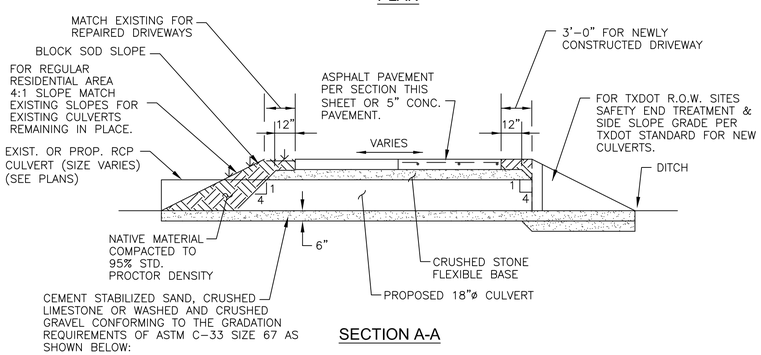

SECTION A-A

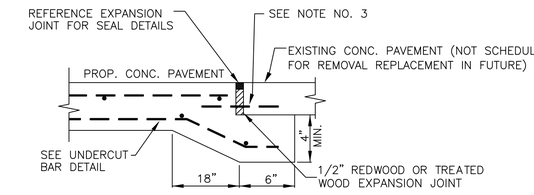

TYPE I PAVING HEADER DETAIL

SCALE: NTS

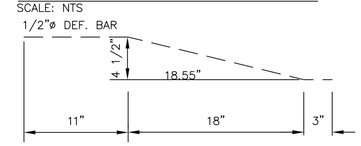

UNDERCUT BAR DETAIL

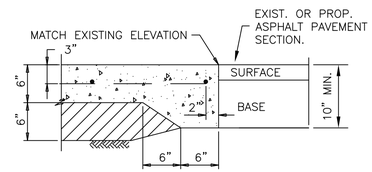

CONCRETE TO ASPHALT TYPE II PAVING HEADER

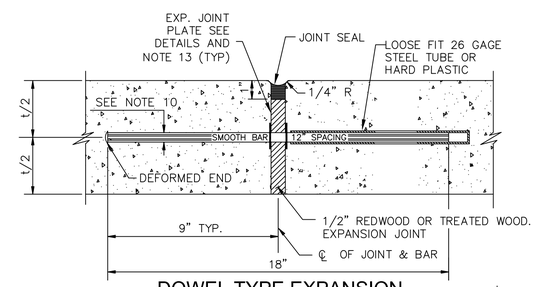

DOWEL TYPE EXPANSION JOINT DETAIL

SCALE: 3"=1'-0"

DRIVEWAY NOTES:

1. IN THE EVENT TOTAL DRIVEWAY AND/OR CULVERT REMOVAL & REPLACEMENT IS REQUIRED, IT SHALL BE DONE PER DETAILS ON THIS SHEET. ASPHALT DRIVEWAYS IN TXDOT R.O.W. SHALL MATCH TXDOT PAVEMENT SECTION.

2. THE MAXIMUM LIMIT OF DRIVEWAY REMOVAL AND REPLACEMENT SHALL BE LOCATED AT THE RIGHT-OF-WAY UNLESS OTHERWISE DIRECTED BY THE CITY ENGINEER (SEE NOTE 7).

3. DRIVEWAYS SHALL BE CONSTRUCTED TO MATCH EXISTING DRIVEWAY WIDTH MEASURED AT THE RIGHT-OF-WAY TO A MAXIMUM WIDTH OF 40'-0". WHEN DRIVEWAY EXCEEDS 20'-0" IN WIDTH, A 3/4" REDWOOD BOARD EXPANSION JOINT W/ STEEL RUNNING THROUGH IT, OR APPROVED EQUAL, SHALL BE INSTALLED THE FULL LENGTH OF THE DRIVEWAY. EXCEPTIONS WILL BE MADE ON A CASE BY CASE BASIS BY CITY ENGINEER'S OFFICE.

4. PROPOSED DRIVEWAY FINISH SURFACE MATERIAL SHALL MATCH EXISTING MATERIALS SUCH AS PEA GRAVEL, INLAID BRICK, STAMPED OR COLORED CONCRETE. EXISTING ASPHALT, SHELL, SHELLCRETE, DIRT, GRAVEL OR GRASS DRIVEWAYS SHALL BE REPAIRED IN KIND AS REQUIRED UNLESS OTHERWISE SHOWN ON PLANS. ASPHALT DRIVEWAYS SHALL BE REPAIRED PER PROPOSED PAVEMENT REPLACEMENT SECTION.

5. DRIVEWAYS SHALL BE MATCHED TO STREET PAVEMENT ELEVATIONS.

6. NATIVE MATERIALS SHALL BE USED AS A BASE LEVELER AND /OR AS BACKFILL REQUIRED WHEN OVER EXCAVATION OCCURS DUE TO POOR SOILS OR ANY OTHER CONDITION RESULTING IN OVER EXCAVATION OF DRIVEWAYS. NATIVE MATERIALS SHALL BE COMPACTED TO 95% STANDARD PROCTOR DENSITY.

7. WHERE TYING INTO EXISTING CONCRETE DRIVEWAY AND CONDITION OF EXISTING DRIVEWAY ALLOWS, PROVIDE 1x4" REDWOOD BOARD W/24" LONG #4 DEFORMED BARS @ 12" O.C.E.W. THROUGH IT DRILLED INTO EXISTING DRIVEWAY. WHERE EXISTING CONCRETE IS IN POOR CONDITION PROVIDE TYPE II PAVING HEADER (DRIVEWAYS ONLY).

8. FILL AT CULVERTS SHALL BE CONTROLLED BY 4H:1V SL OPE RATHER THAN DRIVEWAY SHOULDER WIDTH TO MINIMIZE AMOUNT OF CULVERT PIPE EXPOSED. FOR DRIVEWAYS IN FM3005 R.O.W., SLOPES SHALL CONFORM TO TXDOT STANDARDS. (SEE NOTE 9)

9. IN THE EVENT TOTAL CULVERT REMOVAL IS REQUIRED, SAFETY END TREATMENTS SHALL BE REPLACED OR ADDED PER TXDOT STANDARDS IF NONE EXISTED AT NO SEPARATE PAY. (APPLICABLE TO DRIVEWAYS IN TXDOT R.O.W. ONLY)

10. DOWELS FOR PAVEMENT EXPANSION JOINTS SHALL BE 1" DIA. FOR 6" PAVEMENT THICKNESS.

11. ALL JOINT SEAL MATERIAL SHALL BE HOT POURED ASPHALT RUBBER OR AS APPROVED IN ACCORDANCE W/ ASTM DESIGNATION D3405.

12. DEFORMED METAL STRIPS SHALL BE STAKED IN PLACE W/ #3 BARS.

13. PRE-MANUFACTURED JOINT PLATE, TWO PER LOAD TRANSFER DEVICE, LOOSE FIT ON EXPANSION END AND TACK WELD TO FIXED END.

14. PROVIDE 3/4" (5" THICK PAVEMENT) DIAMETER SMOOTH STEEL BAR, 20" LONG ON 12" CENTERS. END DIAMETER SMOOTH STEEL BAR, 20" LONG ON 12" CENTERS. END TREATMENT SHALL MATCH EXPANSION JOINT ADJACENT TO HEADER. WHERE THE ADJACENT EXPANSION JOINT HAS A SLIP SLEEVE ADJACENT TO HEADER, DRILL HOLE AND DRIVE DOWEL INTO EXISTING PAVEMENT. WHERE ADJACENT EXPANSION JOINT HAS A SLIP SLEEVE OPPOSITE TO THE HEADER, DRILL AND EPOXY DOWEL INTO EXISTING PAVEMENT W/"PRO-ROC" OR EQUAL, AND PROVIDE SLIP SLEEVE ON EXPOSED END. WHEN TYPE II PAVING HEADER IS ADJACENT TO PROPOSED ASPHALT PAVEMENT, PLACEMENT OF EXPANSION JOINT AND SMOOTH BAR IS NOT APPLICABLE.

15. ALL PROPOSED SUBGRADE SHALL BE PROOF ROLLED. IF SOFTSPOTS OR WET SUBGRADE IS ENCOUNTERED TREAT IT WITH FLYASH TO ESTABLISH FIRM SUBGRADE.

16. PROPERTIES WIITH TWO DRIVEWAYS SHALL MAINTAIN A 20' MIN. DISTANCE BETWEEN FLARES AT STREET.

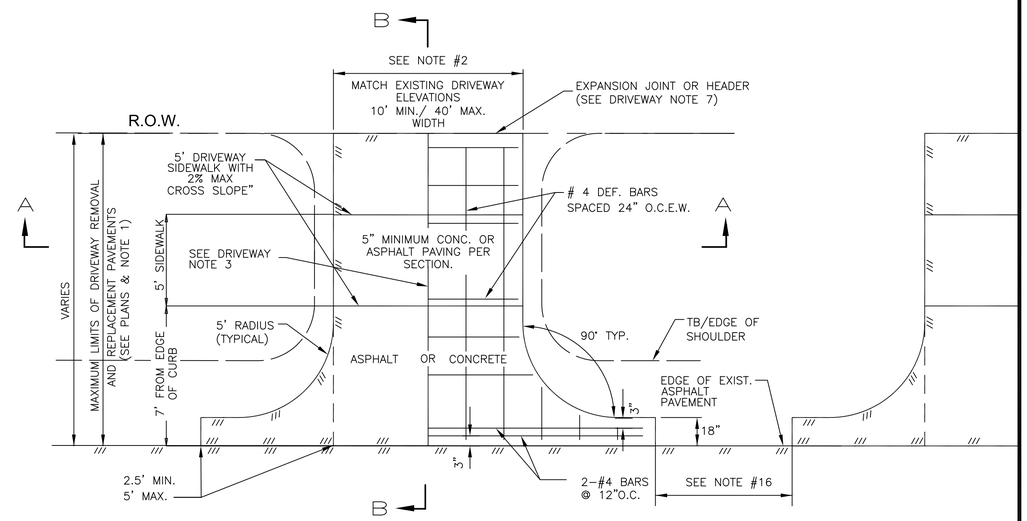

PLAN

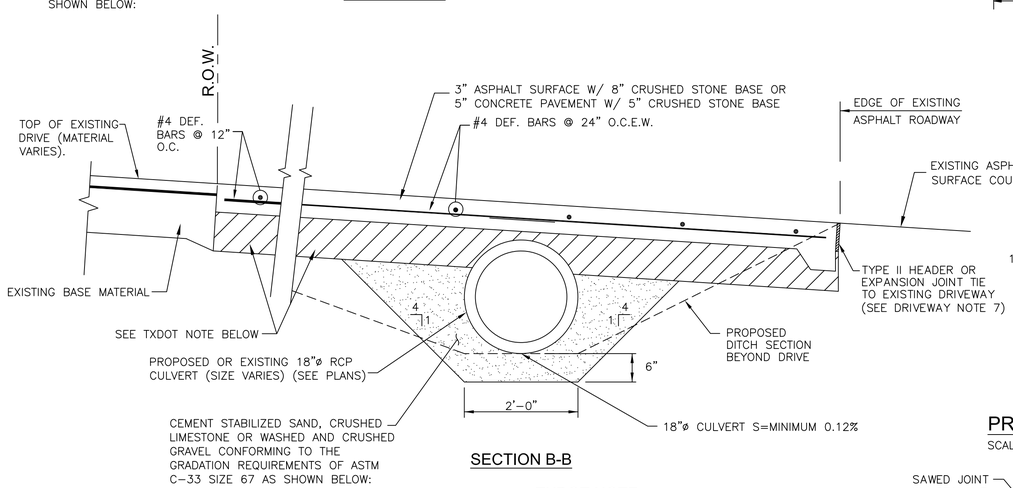

SECTION B-B

PASSING	1 INCH SIEVE	100%
PASSING	¾ INCH SIEVE	90 – 100%
PASSING	⅜ INCH SIEVE	20 – 55%
PASSING	NO. 4 SIEVE	0 – 10%
PASSING	NO. 8 SIEVE	0 – 5%

TXDOT NOTE:

6" MINIMUM CONRETE AND ANY ASPHALT DRIVEWAYS TO BE REPAIRED/REPLACED IN TXDOT RIGHT-OF-WAY SHALL MATCH EXISTING TXDOT PAVEMENT SECTION. BASE MATERIAL FOR ASPHALT DRIVEWAYS SHALL BE CRUSHED LIMESTONE. CRUSHED RECYCLED CONCRETE IS NOT ACCEPTABLE TO TXDOT.

CONCRETE OR ASPHALT DRIVEWAY DETAIL

SCALE: NTS

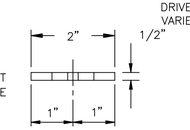

PLAN

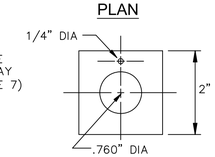

ELEVATION

PRE-MFG. JOINT PLATE DETAIL

SCALE= NTS

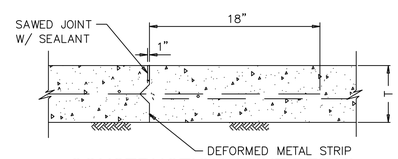

CONSTRUCTION JOINT DETAIL

SCALE: 1 1/2"=1'-0"

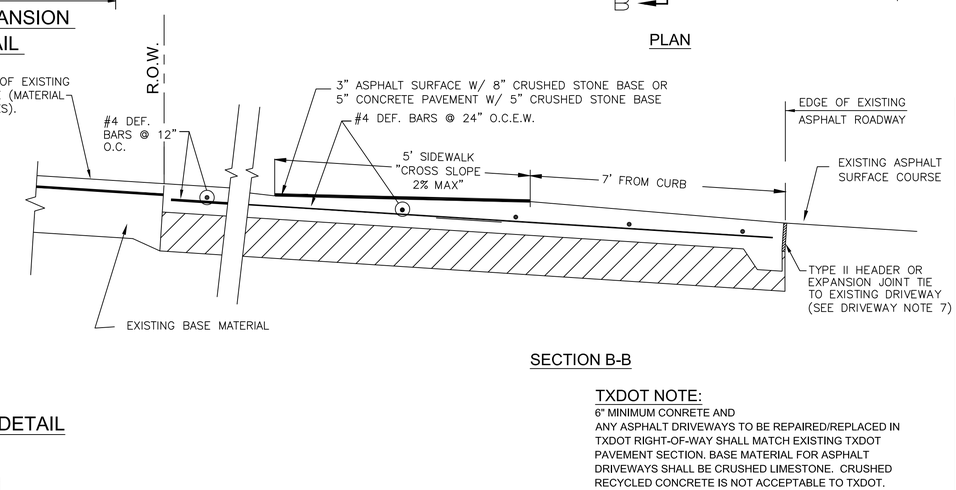

SECTION B-B

TXDOT NOTE:

6" MINIMUM CONRETE AND ANY ASPHALT DRIVEWAYS TO BE REPAIRED/REPLACED IN TXDOT RIGHT-OF-WAY SHALL MATCH EXISTING TXDOT PAVEMENT SECTION. BASE MATERIAL FOR ASPHALT DRIVEWAYS SHALL BE CRUSHED LIMESTONE. CRUSHED RECYCLED CONCRETE IS NOT ACCEPTABLE TO TXDOT.

CONCRETE OR ASPHALT DRIVEWAY DETAIL

SCALE: NTS

MK.	DESCRIPTION	DATE	DWN.	CHK.

City Engineer

City of Galveston, Texas

Engineering Section

Driveway Construction Details

SHEET NO.:	SCALE: HORZ : VERT : ONE INCH	SHEET
DATE: FEBRUARY, 2018	IF ABOVE MARK DOES NOT MEASURE ONE INCH, THEN THIS DWG. NOT TO SCALE	
DWN BY: JR		OF
CHKD BY: DRF		